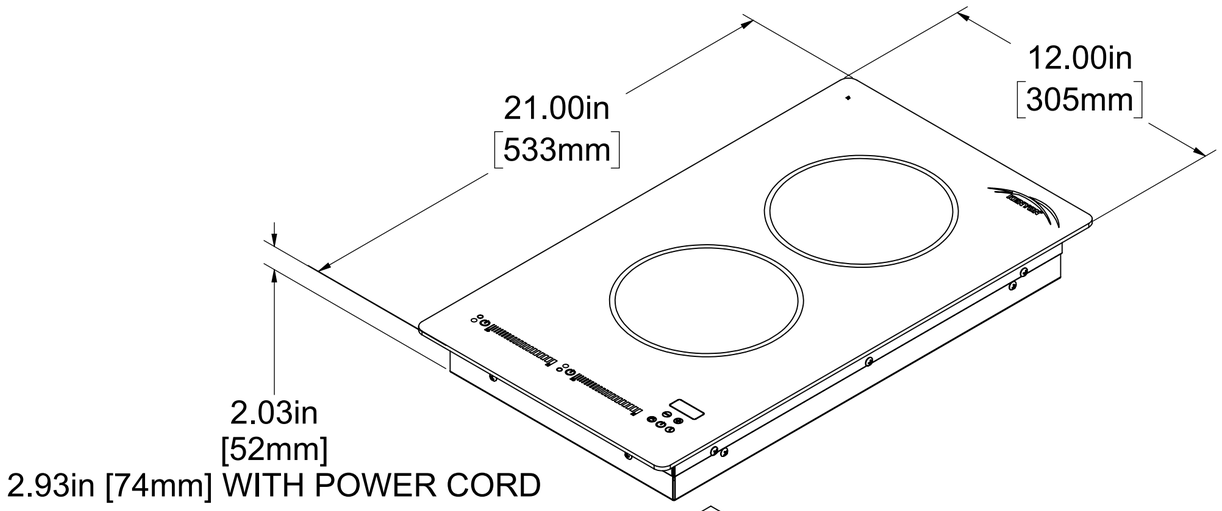
21.00in
[533mm]
12.00in
[305mm]
2.03in
[52mm]
2.93in [74mm] WITH POWER CORD

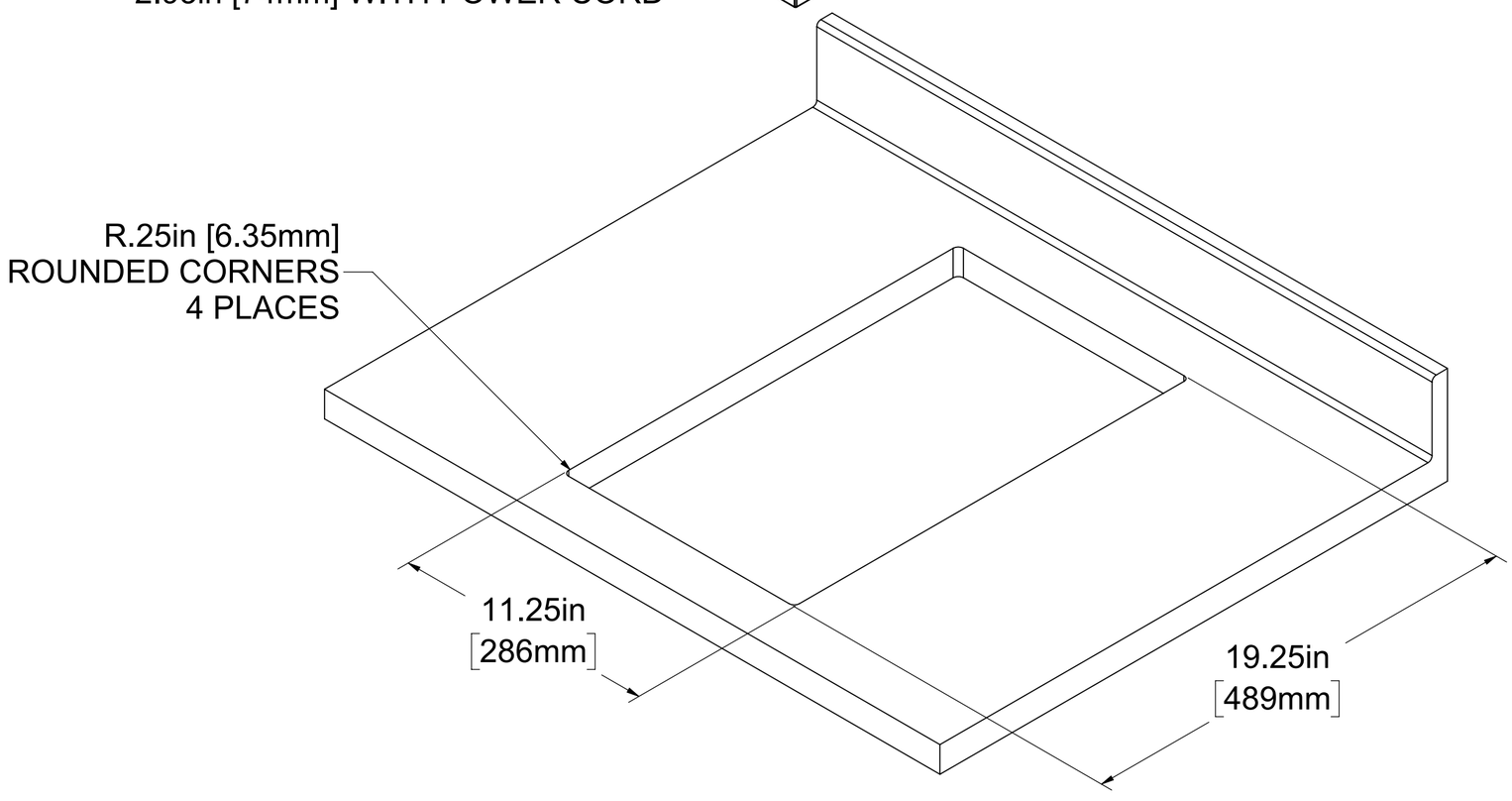
R.25in [6.35mm]
ROUNDED CORNERS
4 PLACES
11.25in
[286mm]
19.25in
[489mm]