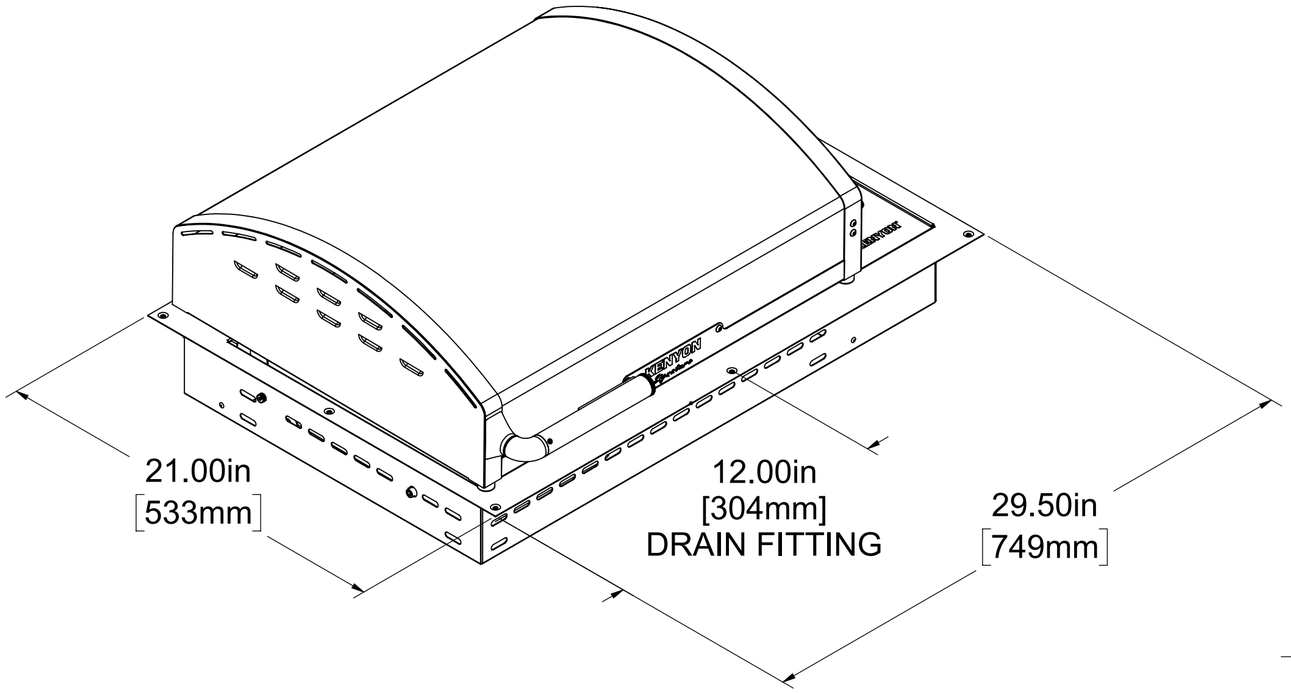
21.00in
[533mm]
12.00in
[304mm]
DRAIN FITTING
29.50in
[749mm]

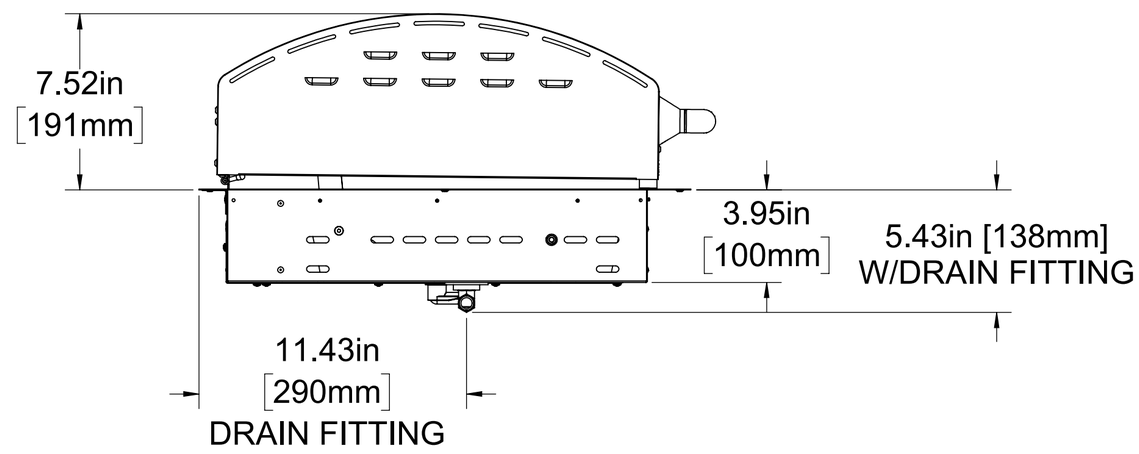
7.52in
[191mm]
3.95in
[100mm]
5.43in [138mm]
W/DRAIN FITTING
11.43in
[290mm]
DRAIN FITTING

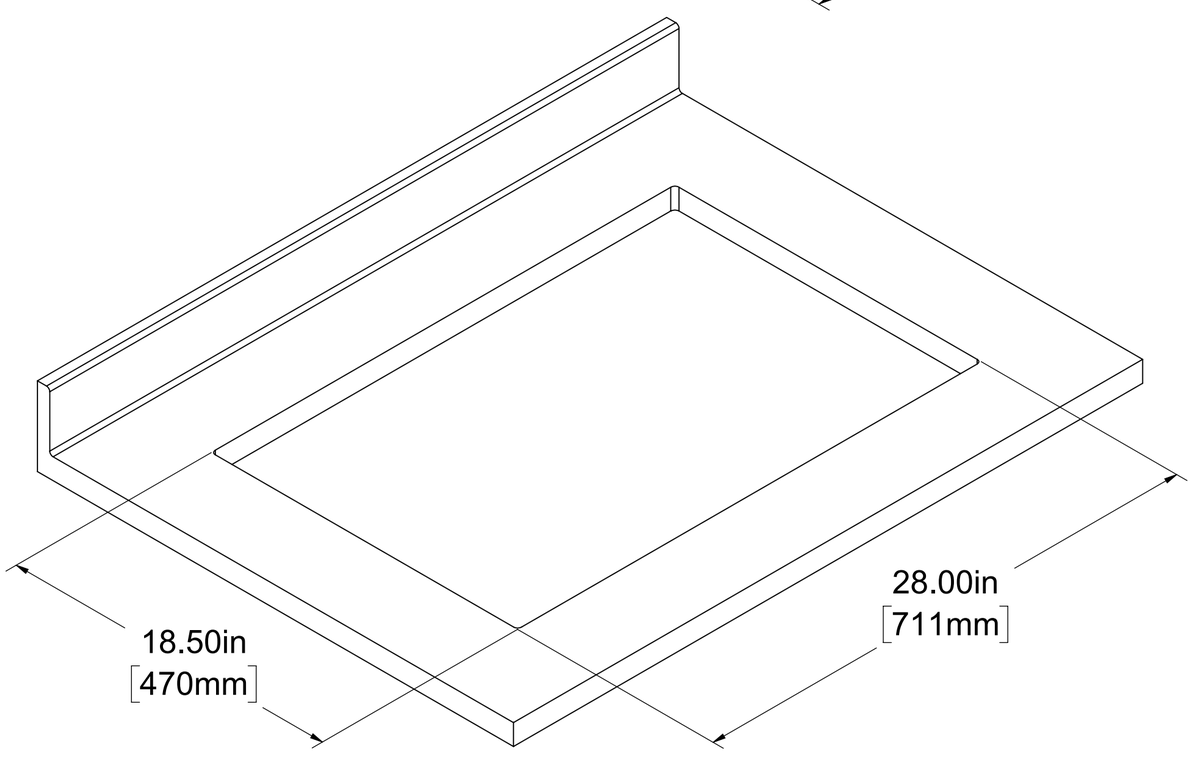
18.50in
[470mm]
28.00in
[711mm]

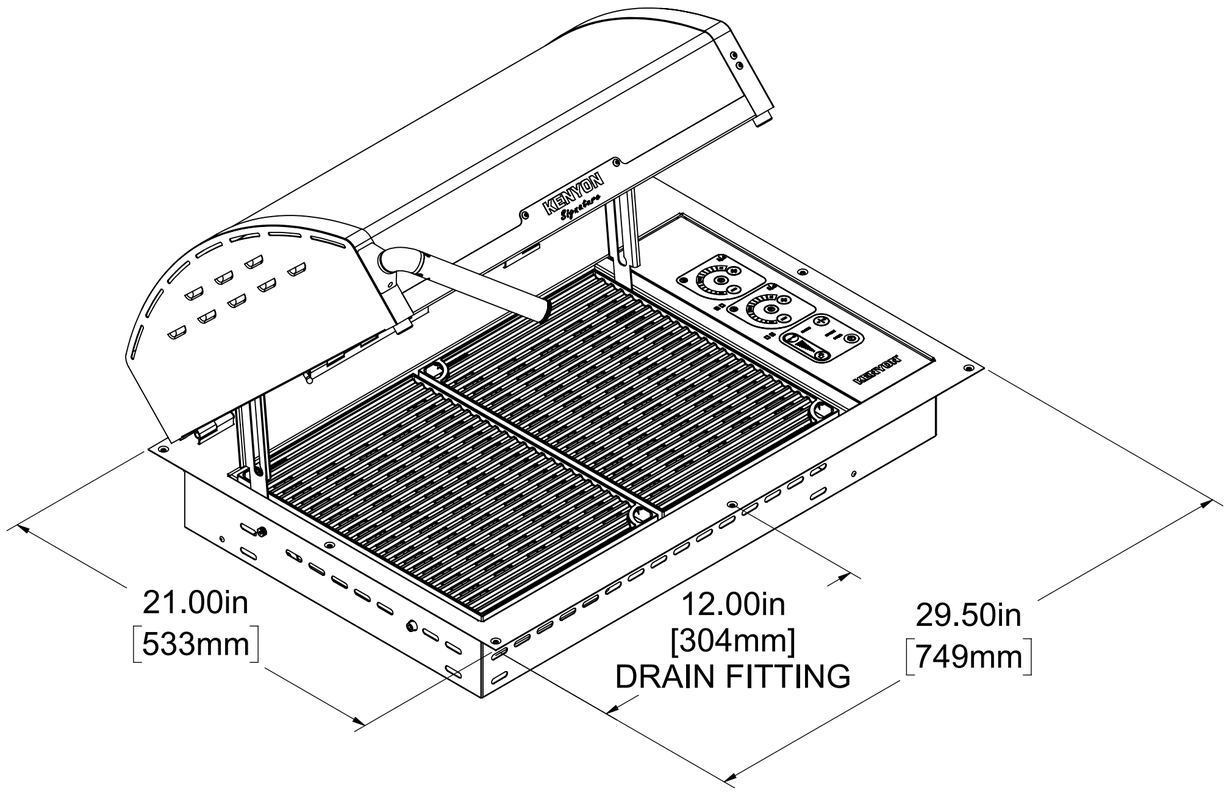
KENYON
Signature
21.00in
[533mm]
12.00in
[304mm]
DRAIN FITTING
29.50in
[749mm]

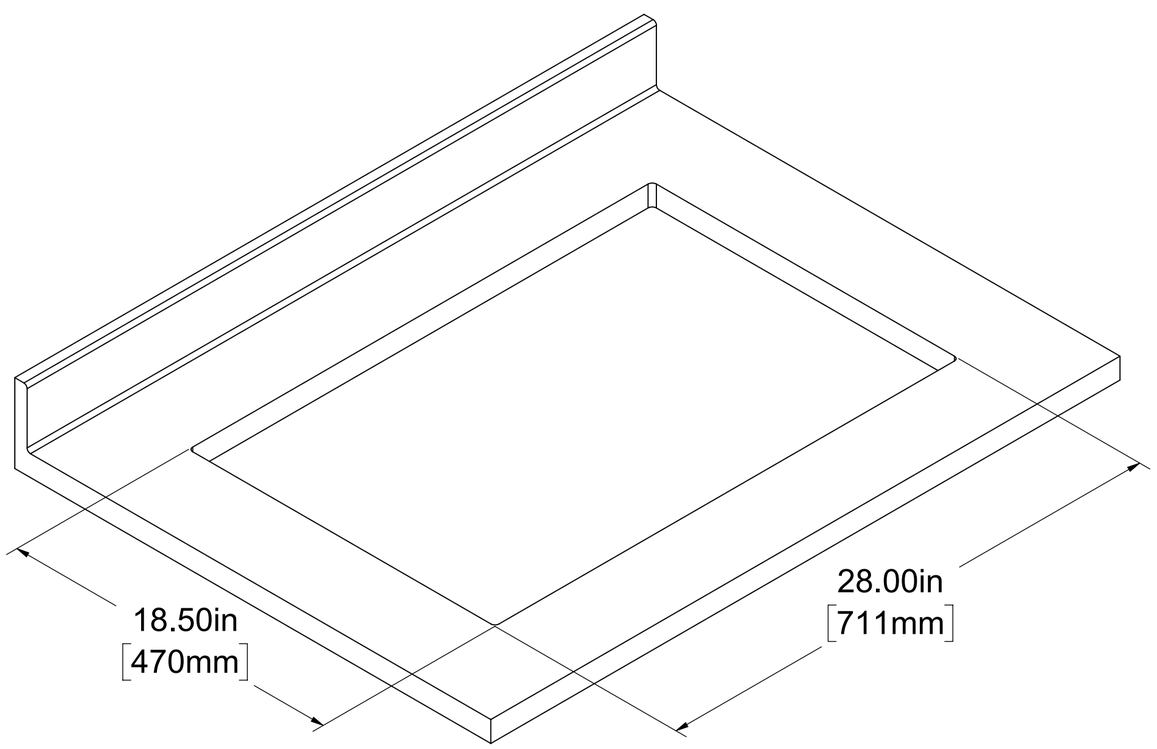
18.50in
[470mm]
28.00in
[711mm]

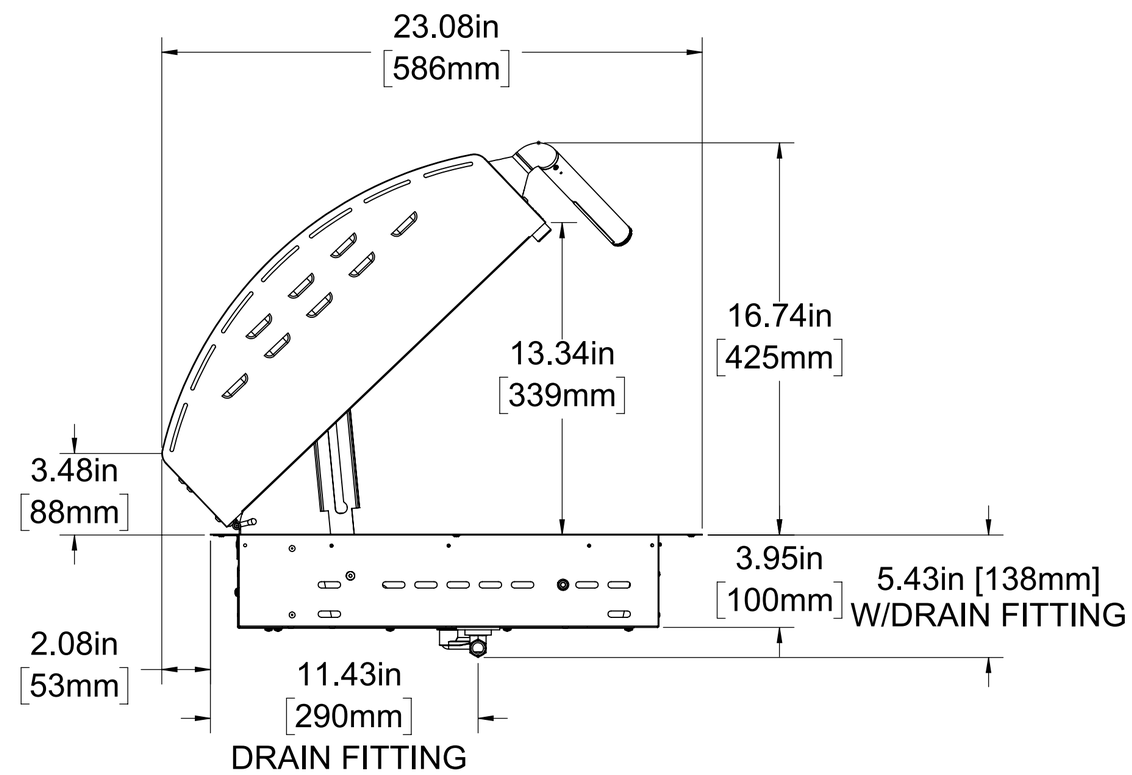
23.08in
[586mm]
13.34in
[339mm]
16.74in
[425mm]
3.48in
[88mm]
3.95in
[100mm]
5.43in [138mm]
W/DRAIN FITTING
2.08in
[53mm]
11.43in
[290mm]
DRAIN FITTING