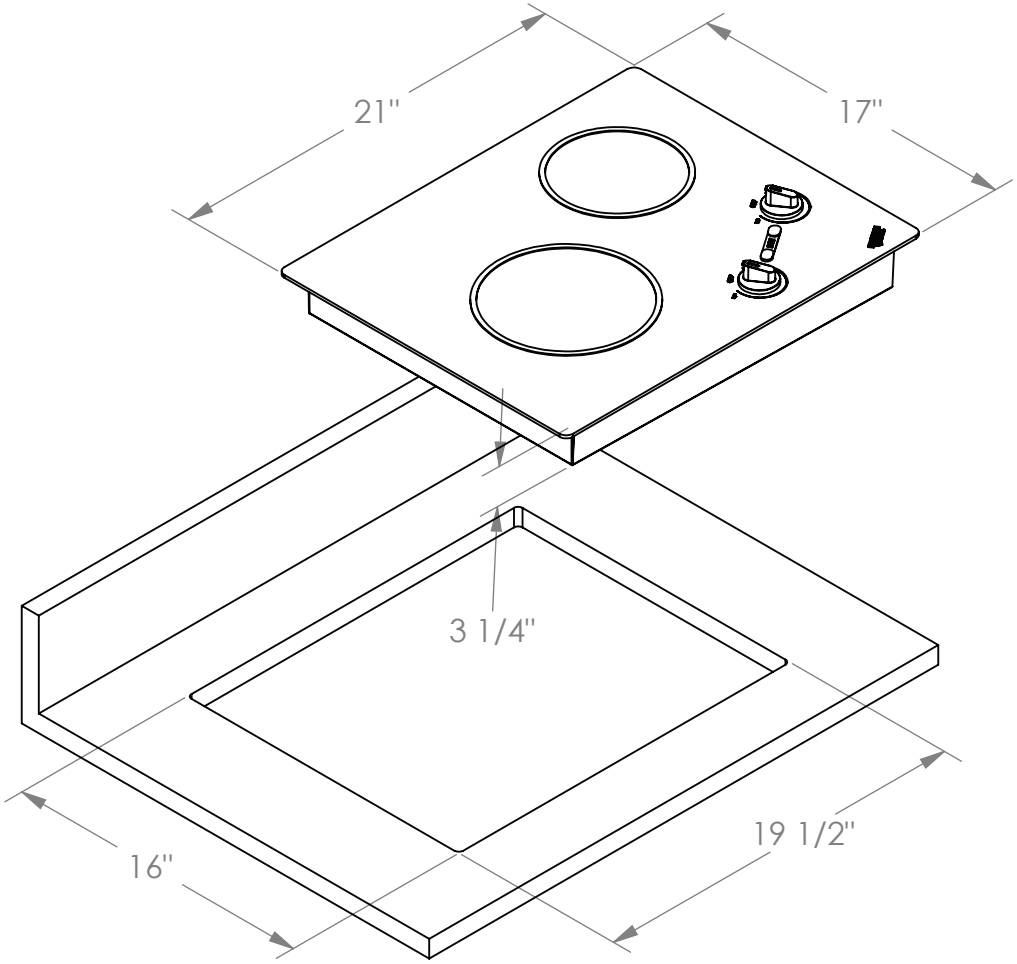
21"
17"
3 1/4"
16"
19 1/2"