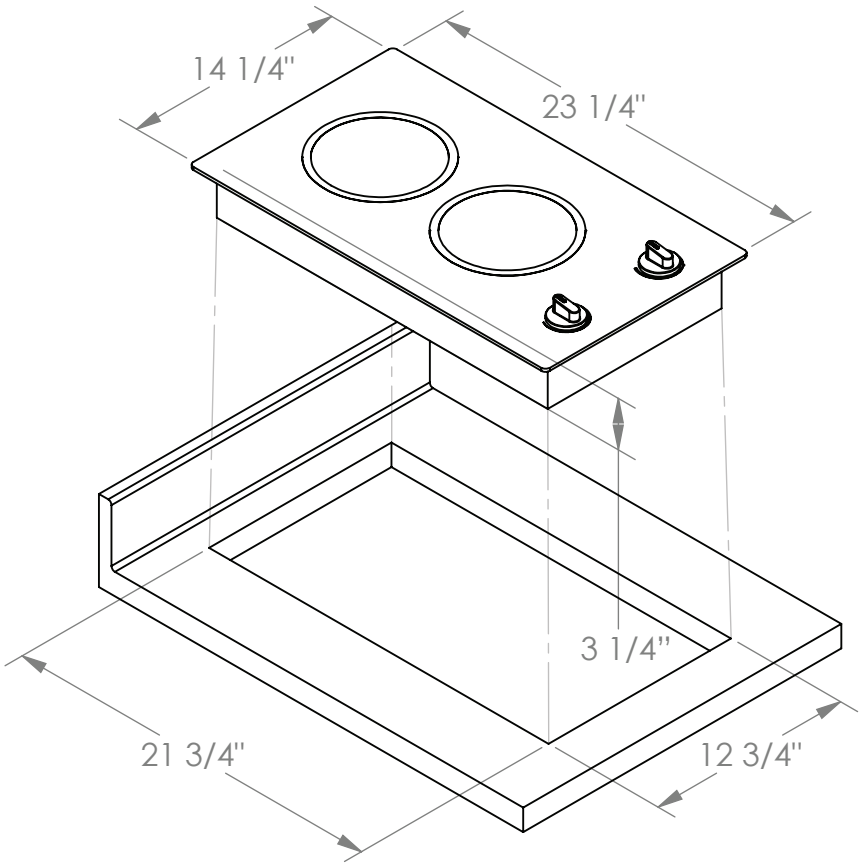
14 1/4"
23 1/4"
3 1/4"
21 3/4"
12 3/4"