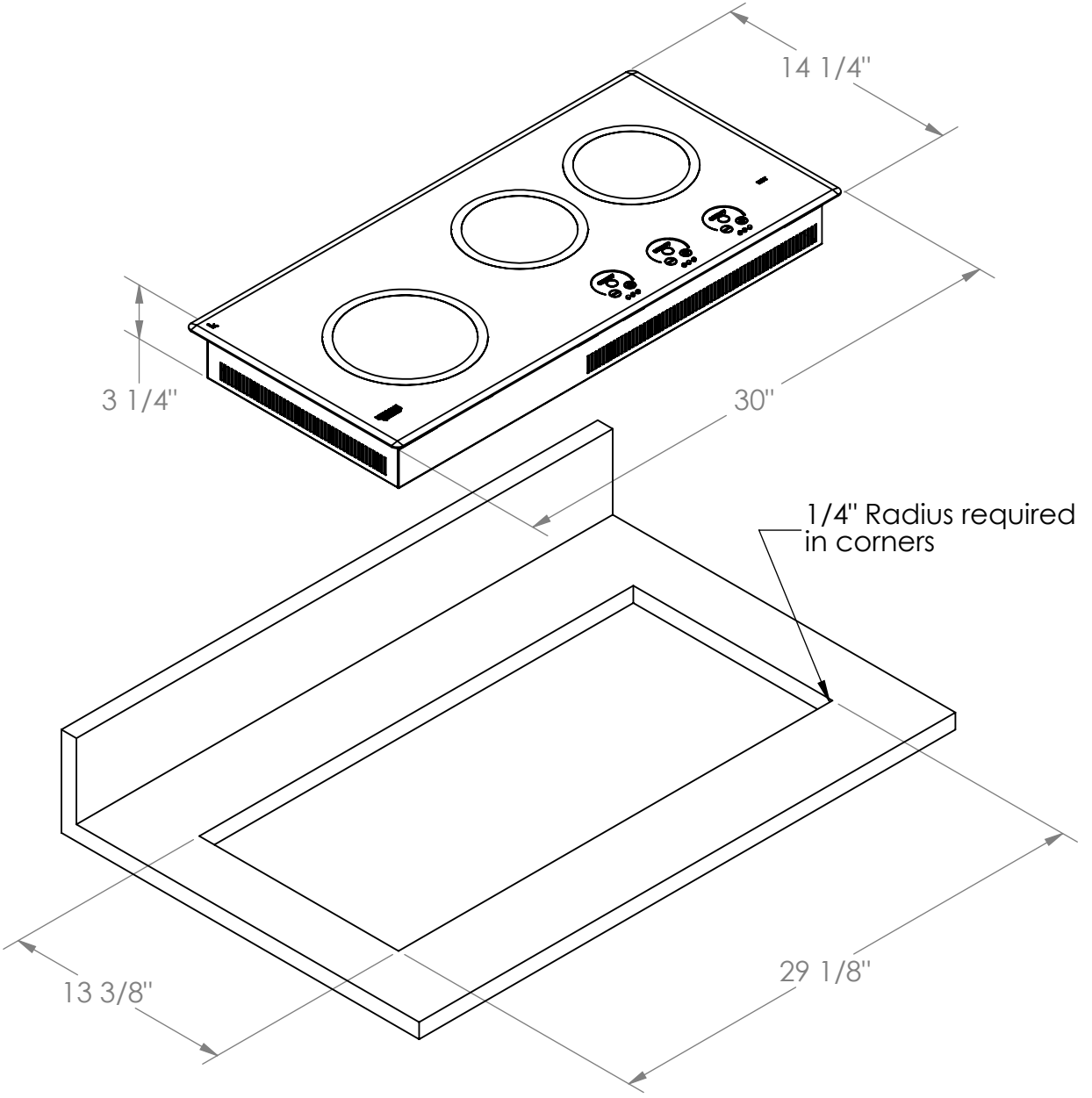
14 1/4"
3 1/4"
30"
1/4" Radius required
in corners
13 3/8"
29 1/8"