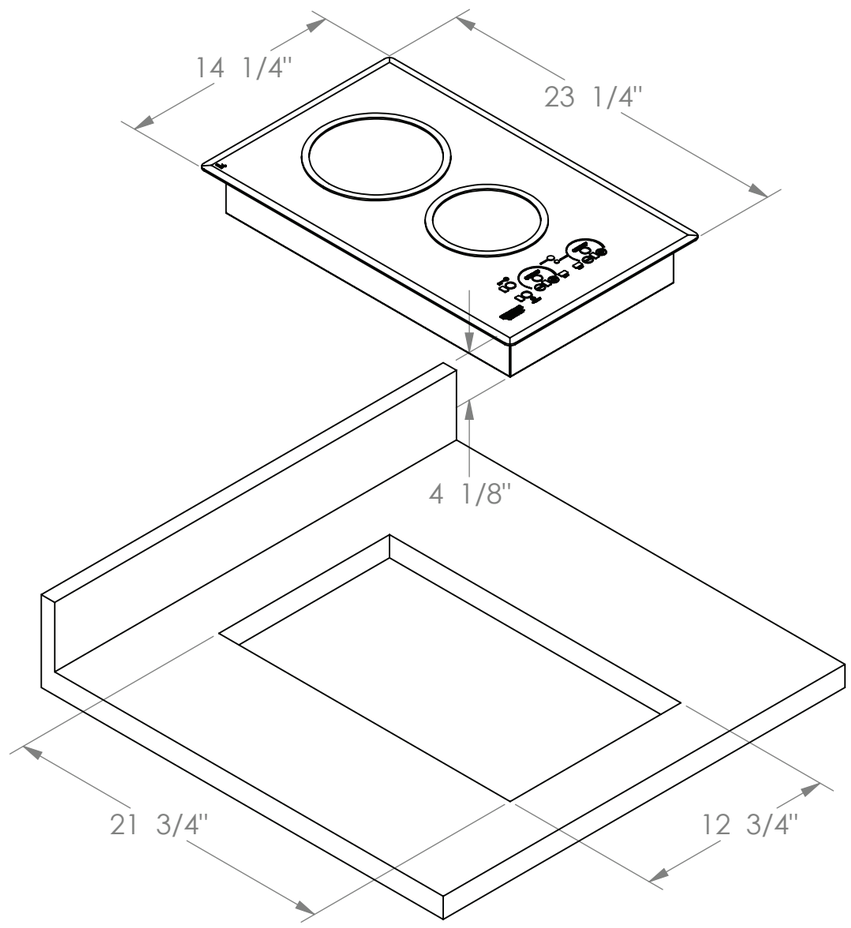
14 1/4"
23 1/4"
4 1/8"
21 3/4"
12 3/4"