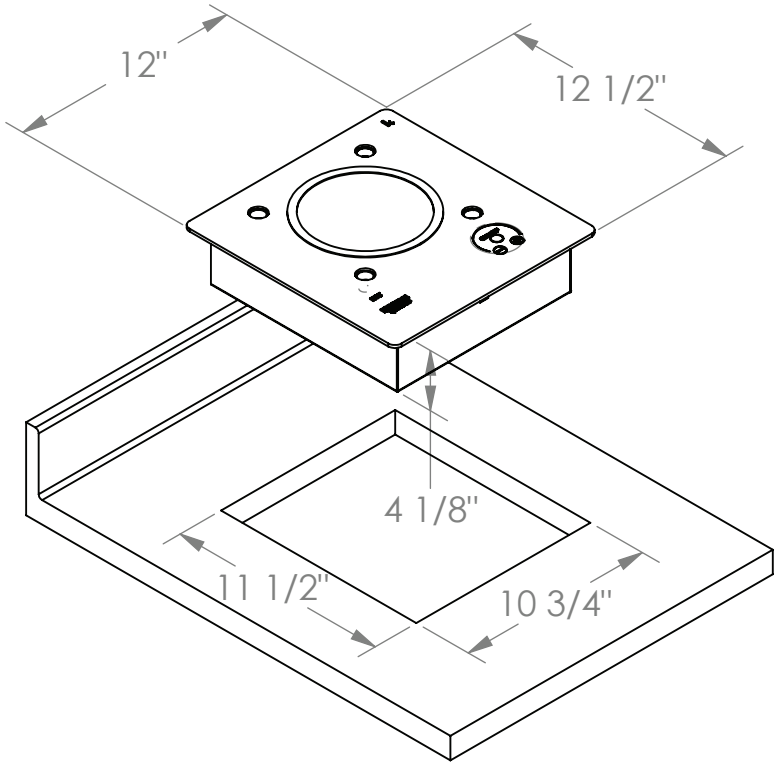
12"
12 1/2"
4 1/8"
11 1/2"
10 3/4"