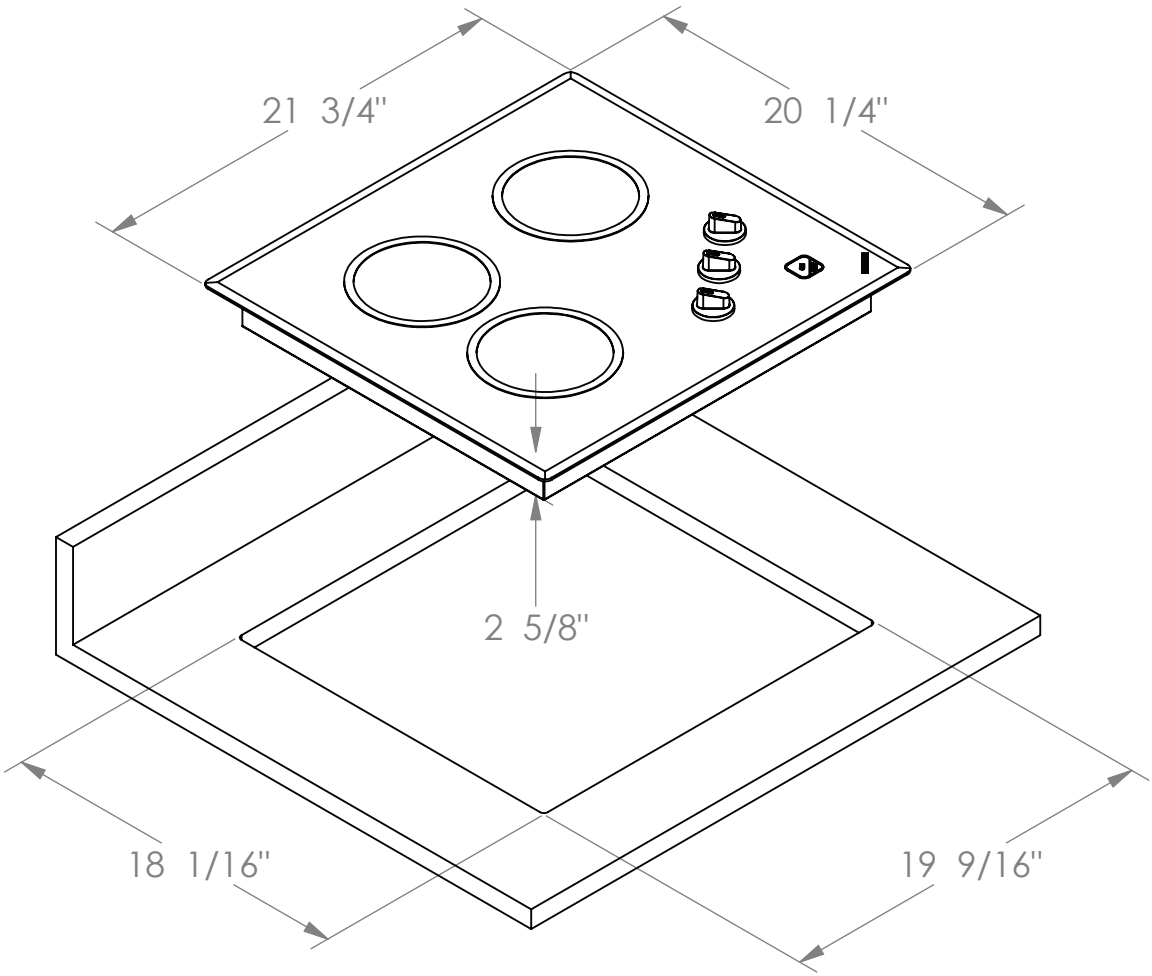
21 3/4"
20 1/4"
2 5/8"
18 1/16"
19 9/16"