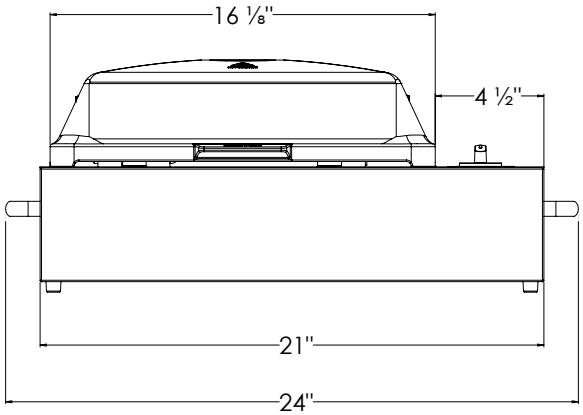
16 ⅛"
4 ½"
21"
24"

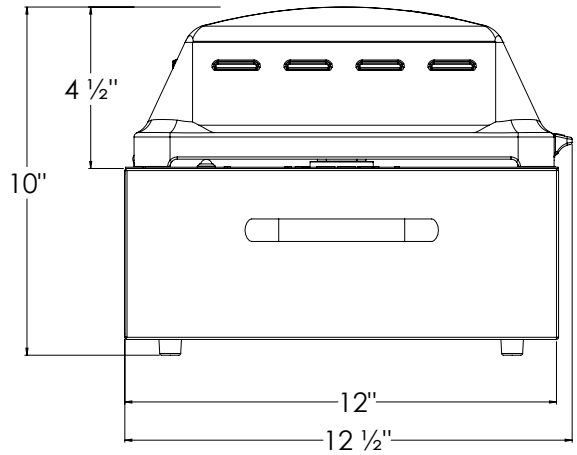
4 ½"
10"
12"
12 ½"

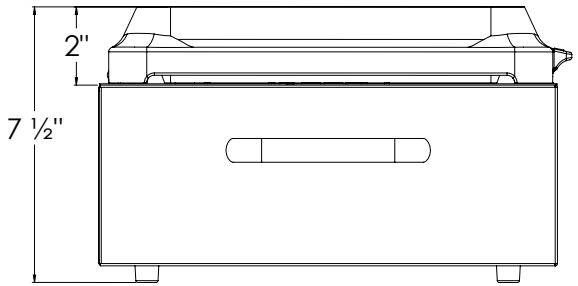
2"
7 ½"

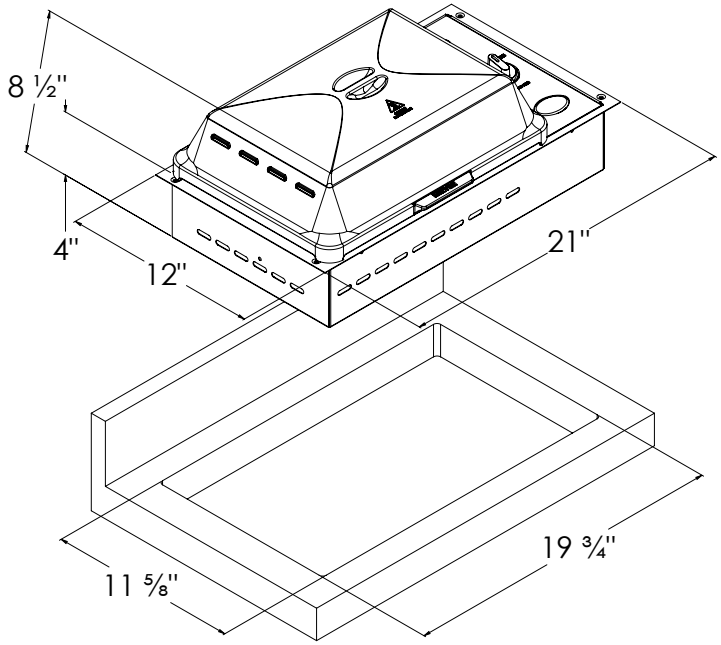
8 ½"
4"
12"
21"
11 ⅝"
19 ¾"