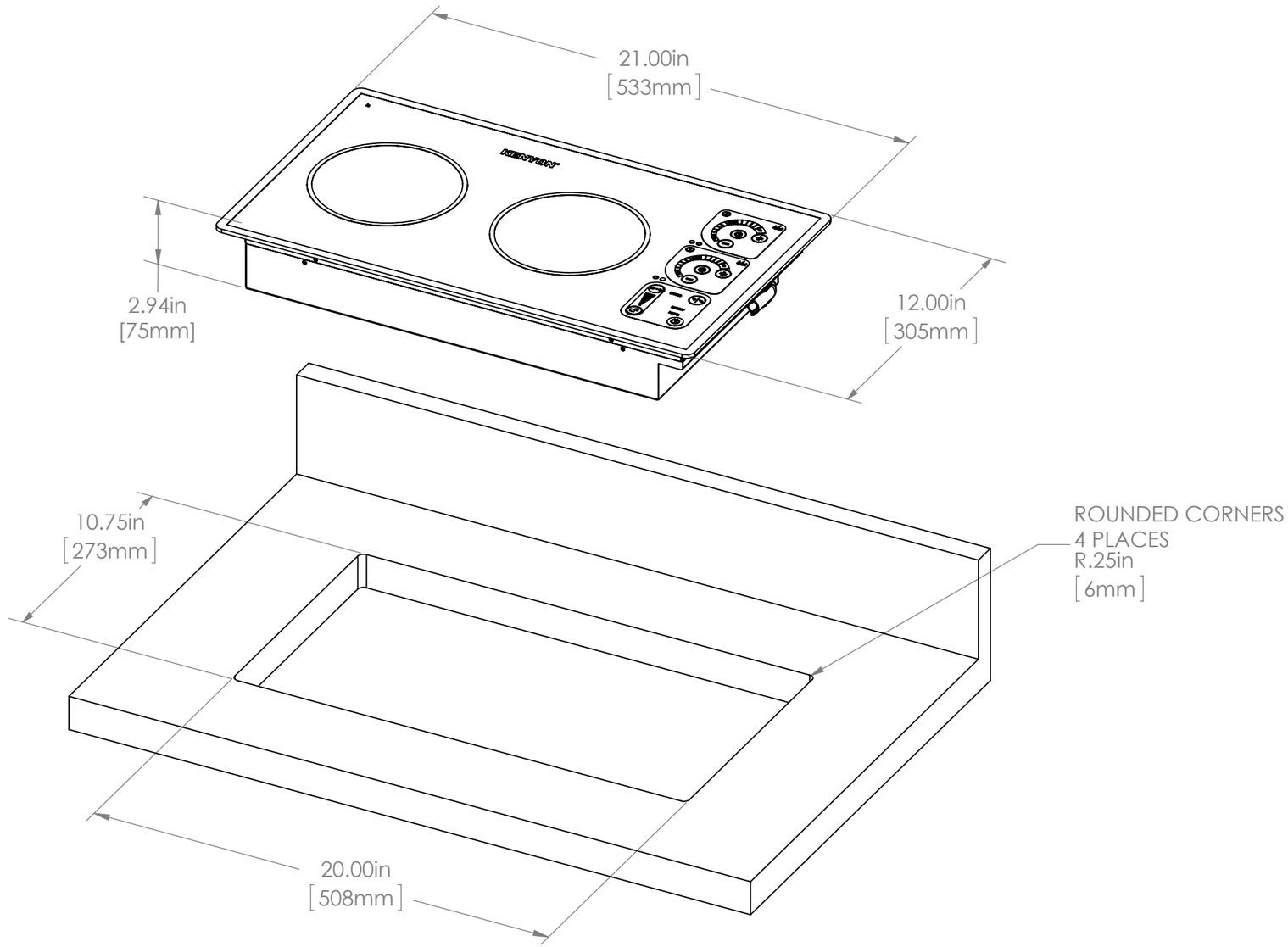
21.00in
[533mm]
2.94in
[75mm]
12.00in
[305mm]
10.75in
[273mm]
ROUNDED CORNERS
4 PLACES
R.25in
[6mm]
20.00in
[508mm]