Read me
FIRST

www.CookWithKenyon.com

KENYON®

Make any day a weekend

CITY GRILL®

OWNERS MANUAL

Part # 143641
Created: July 13, 2009
Revised: August 7, 2017

Table of Contents

Section **Page**

Important Safeguards **3**

How to Use Grill
- Quick Start Tips **4**
- Stuffed French Toast **7**

Product Specifications **8**

Installation Instructions
- Package Contents **9**
- Electrical Requirements **10**
- Countertop Installation **10**
- Drain Connection **13**
- Outlet Location **13**
- Final Preparations Prior to Use **13**

Operation of Grill
- Power Control **15**
- Power Cord **16**
- Grill Parts **17**
- Lid Removal **18**

Warranty Information **19**

Kenyon International, Inc.
8 Heritage Park Road
P.O. Box 925
Clinton, CT 06413 USA
Phone: 860-664-4906
www.CookWithKenyon.com

IMPORTANT SAFEGUARDS

When using electrical appliances, basic safety precautions should always be followed including the following:

1. Read ALL instructions prior to using product.
2. Do not touch hot surfaces. Use handles or knobs.
3. To protect against electrical shock, do not immerse cord or plugs in water or other liquid.
4. Close supervision is necessary when any appliances are used near children.
5. Unplug from outlet when not in use and before cleaning. Allow to cool before putting on or taking off parts.
6. Do not operate appliance with a damaged power cord or plug. If the appliance malfunctions, discontinue use and contact the nearest authorized appliance dealer or the factory for examination, repair or adjustment.
7. The use of accessory attachments not supplied by the manufacturer of the appliance may cause injuries.
8. When used as a portable grill, store indoors when not in use. When used as a built-in grill, suitable shelter must be provided to prevent direct exposure to rain. Covers available.
9. Do not let cord hang over edge of table or counter, or touch hot surfaces.
10. Do not place on or near a hot gas or electric burner, or in a heated oven.
11. Extreme caution must be used when moving an appliance containing hot oil or other hot liquids.
12. Always attach plug to appliance first, then plug cord into the wall outlet. To disconnect, turn any control to “off”, then remove plug from wall outlet.
13. Do not use appliance for other than intended use.
14. Always place a minimum of one (1) cup of water in disposable drip tray prior to grilling.
15. Never leave children alone - children should not be left unattended around the grill at any time.
16. Allow the grill to cool before taking off cooking grates, disposable drip tray or lids.
17. Fuel, such as charcoal briquettes, are not to be used with this appliance.
18. Ensure grill is installed per instructions and properly grounded by a qualified electrician.
19. Do not replace or attempt to repair any part of the grill, unless otherwise noted in this manual.

All other service is to be performed by a factory authorized technician.

20. Do not use water to extinguish a grease fire, use dry chemical fire extinguisher.
21. Do not store flammable materials near the grill.
22. Do not wear loose fitting or hanging apparel when using the grill.

PLEASE READ THESE INSTRUCTIONS IN THEIR ENTIRETY BEFORE INSTALLATION AND USE. SAVE THESE INSTRUCTIONS

HOW TO USE GRILL

THE ABOVE INSERT IS LOCATED UNDERNEATH YOUR GRILL LID. PLEASE READ INSERT AND REMOVE PRIOR TO GRILL USE.

1. Before using your grill, remove the cooking grate and drip tray from the grill. Wash the grate with warm soapy water using a non-abrasive cloth. USE ONLY HIGH TEMP PLASTIC UTENSILS WHEN GRILLING. Visit our web site to purchase a set of high quality stainless steel high temp plastic grill utensils, www.cookwithkenyon.com.

2. Make sure the drip tray is inserted all the way into the bottom of grill and electric element brackets are not resting on drip tray.

3. Cover the bottom of the drip tray with a liquid. Water is fine. PLEASE DO NOT USE A FLAMMABLE LIQUID! Doing so would ruin your cookout. Using apple juice if you are grilling pork, adds a nice flavor to the meat. A can of lime soda is wonderful if you are grilling fish. Try any kind of liquid that you enjoy drinking. ***Just remember always add liquid to the drip tray prior to grilling.***

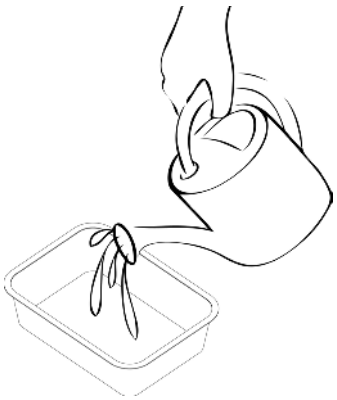

4. To keep your grill smoke free, always clean the grilling surface after each use. Simply wash with warm soapy water using a non-abrasive cloth or place in your dishwasher. Empty the drip tray and wipe with a damp paper towel. The drip tray can be used multiple times before replacement is necessary.

5. Place your cooking grate or optional griddle (part #B96000) onto the element with drip tray installed. Use the griddle for foods such as eggs, pancakes or my favorite - stuffed french toast!

6. Preheat grill for 5 to 9 minutes on high (8 bars). Adjust heat setting for type of food.
   - Steak and hamburgers 8 bars - high heat
   - Chicken, pork and fish 6 bars - medium high heat
   - Vegetables 5 bars - medium heat

7. Close the lid and cook. Enjoy the best grilled food you have ever tasted!

8. Clean up. This is easy to do as you will soon learn. After the grill has cooled some, take a few pieces of paper toweling and place on the grilling surface. Pour about one ounce of water on the toweling and then using your high temp nylon tongs, swab the paper toweling back and forth to loosen up the residue from your grilling. Throw the paper towel away and wipe the grate off with a dry paper towel.

9. Once the grate has cooled sufficiently, remove the grate and place in your dishwasher for a thorough cleaning.

10. With the grate removed, lift up the electric element and remove the drip tray. Empty the contents of the drip tray in an appropriate place, please don't pour it on your neighbor's lawn. Wipe the tray out with a dry paper towel and reuse the tray. The tray can last for many uses.

11. After you have used your grill many times, you may want to wash the lid. The lid can be placed in your dishwasher and run on the pots & pans cycle. This will restore your grill to its original pristine look.

12. To clean the grill, first be sure the cooking surface has cooled enough to handle. Then remove the grate, lift up the electric element until it locks in the up position, then remove the drip tray.

13. Wipe the stainless steel surfaces with a damp cloth to remove any residue from previous grilling sessions.

14. Your Kenyon grill came with a sample bottle of stainless steel cleaner. Use this cleaner once a month to keep your grill looking like new.

15. The knob for the heat control can be removed to clean underneath by pulling up on the skirt of the knob. Do not pour water directly on the knob or under the knob as this could possibly make its way into the control.

16. Do not submerge the grill in water or other liquid as this will cause an electrical short and possible shock which may cause death to the user.

17. The knob on your grill is designed to fit snugly into the rubber bushing thus preventing any liquid from getting into the electric control housing. Periodically you should pull the knob off and apply some light lubricant such as vaseline to the round plastic shaft of the control knob.

Stuffed French Toast

16 slices Thin Sliced Bread “any kind but not the white stuff”
1 lb. Cream Cheese (softened)
½ cup Peach Preserves (or your favorite)
4 T. Butter

French Toast Batter:
5 Large eggs thoroughly beaten
1 cup Milk
1 T. Cinnamon, ground
½ t. Allspice, ground
½ t. Coriander, ground
2 oz. Water (Dark Rum, Optional)

In a large bowl, place the eggs and beat with a wire whisk. Add the milk and beat again until incorporated. In a separate smaller bowl pour water or Rum (if you prefer) and add dry ingredients, mix thoroughly. Once the dry ingredients have been mixed, add to the egg and milk mixture and beat again until mixed. By doing this you avoid the clumps that come with making batter.

Method of Preparation:
This will require the use of your griddle. Preheat your City Grill™ on medium high heat (6 bars) for approximately ten minutes.
Once the cream cheese has softened, mix with the peach preserves. Divide equally onto eight slices of bread and spread evenly. Place the remaining eight slices on top to make a sandwich. When your griddle has been preheated, add two tablespoons of butter and move around to coat the griddle. Reserve the rest of the butter for the remaining pieces of French Toast. Take the sandwich and dip into the mixture and flip it over to coat both sides of your bread.
Quickly do this to three more “sandwiches”. You will now have four pieces of stuffed French Toast on your griddle.
Be careful not to burn. Flip the sandwiches over and continue cooking until both sides are browned nicely.
At this point you either serve with some nicely warmed maple syrup and butter, or you can keep warm in a low oven until you finish the remaining pieces of French Toast.

PRODUCT SPECIFICATION

City Grill™
Model B70200 Portable - 120V AC 50/60Hz - 1300 WATTS - 11 AMPS
Overall dimensions: 12” x 21” x 5.5” (9” with lid)
305mm x 534mm x 139.7mm (228.6mm with lid)

Built-In - 120V AC 50/60Hz - 1300 WATTS - 11 AMPS
Overall dimensions: 12” x 21” x 5” (8.5” with lid)
305mm x 534mm x 127mm (215.9mm with lid)
Depth does not include drain fitting - add 1” or 25.4mm
Cut-out dimensions: 11.625” x 19.75” with .5” radius
295mm x 502mm with 6.4mm radius

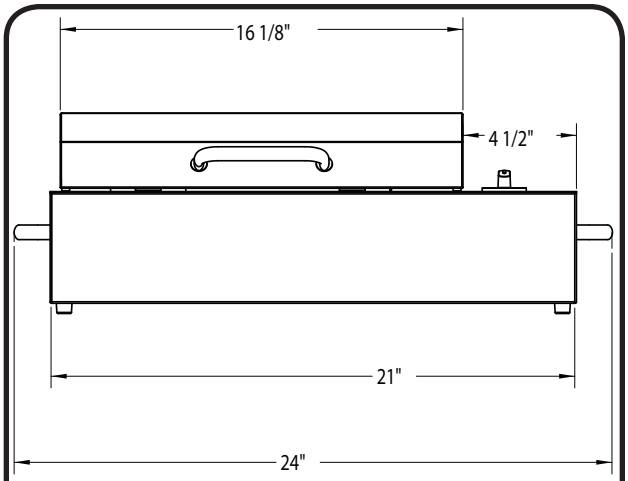

B70200 Portable Front View
Fig. 1

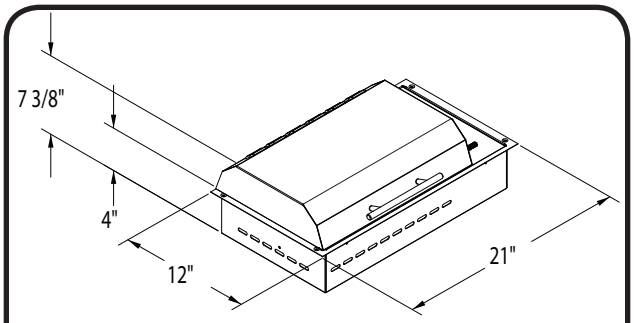

Built-in Overall Dimensions
Fig. 2

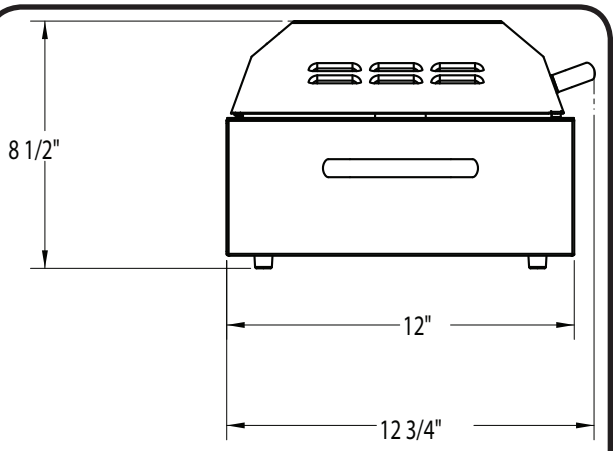

B70200 Portable End View
Fig. 3

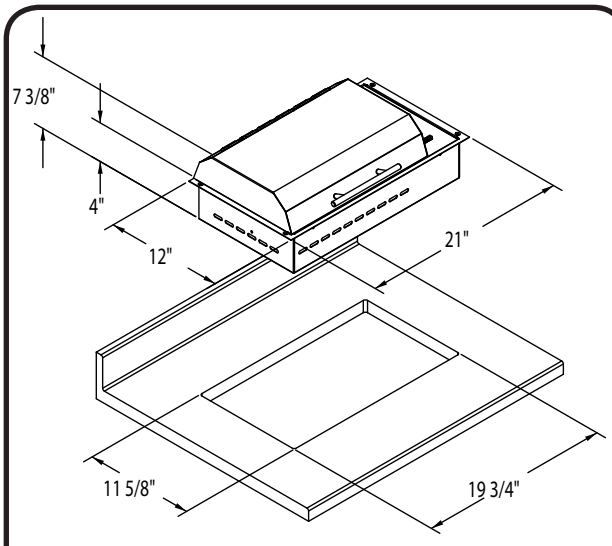

Built-In Cut-out Dimensions
Fig. 4

INSTALLATION

Package Contents

Your City Grill™ is assembled and ready for use. Before you use the grill write your unit's serial number here for future reference: _____. The serial number can be found on the back right side of the enclosure with the control knob. The serial number consists of six digits.

Contained in the shipping container is the City Grill™, manual and stainless steel cleaner. If any components are missing or damaged, call KENYON immediately.

Fig. 5

Electrical Requirements

Check the Electrical Supply Requirements

This product must be installed in accordance with national, state and local electric codes. The following table provides the correct voltage, amperage and frequency that must be supplied to the grill.
The supply must be from an individual grounded circuit that is protected by a circuit breaker and rated per the specifications for the model as shown in the table below.

KENYON Part #	Max Load	Power Supply	Plug Type
B70200	1300 Watts	120V AC 11A 60Hz	3 prong grounded cord with GFCI

WARNING:
If the electrical supply does not meet the product specifications, consult with a licensed electrician before proceeding with installation!
Do not remove the GFCI device from the supplied power cord under any circumstance.

Countertop Installation

Your City Grill™ is supplied with a factory installed polished stainless steel flange that accepts four oval head wood screws for mounting. The trim flange of the grill is designed to hold the unit firmly in place in the countertop. If desired, you may seal the edge of the countertop beneath the trim flange. We recommend a NON-ADHESIVE such as acrylic latex caulk. This will help reduce the chance of damage to the trim flange should the unit need to be removed from the countertop. Should you need to remove the unit from the countertop after installation simple take a piece of fishing line and run back and forth under the trim flange to break the caulk bond.

WARNING:
Allow a 2 inch (2”) minimum clearance between the bottom of the grill and combustible surface located below, ie: the upper edge of a drawer installed below the grill (Fig. 7, page 12). Failure to provide proper clearances and ventilation may result in a fire hazard.

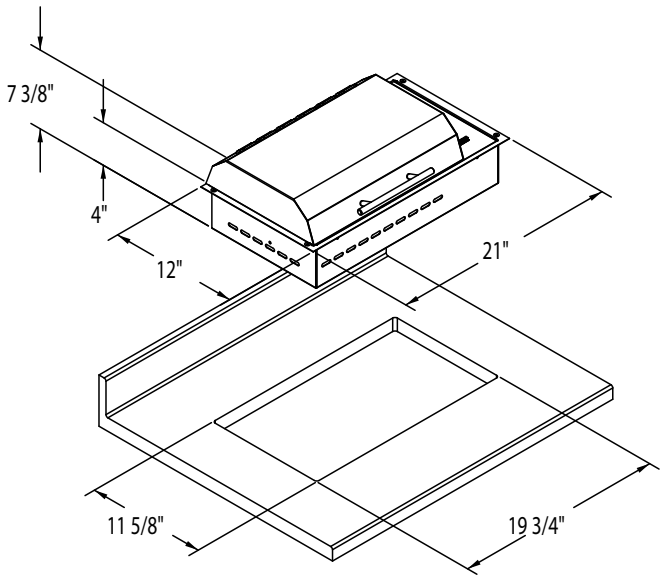

Countertop Cutout DIMENSIONS

Please read this section prior to making cutout for the grill.

It is important to plan ahead for installation of the grill, keeping the following dimensions in mind (**please refer to Figure 6 below).**

A - 13 inches maximum depth of overhead cabinets
B - 36 inches is minimum height of countertop above floor
C - The minimum flat countertop surface that the grill will rest upon must be equal to or greater than the overall grill dimensions (refer to the page 8 for overall grill dimensions).
D - 30 inches minimum clearance between the top of the grill and the bottom of an unprotected wood or metal cabinet or 24 inch minimum clearance when the bottom of wood or metal cabinet is protected by not less than 1/4 inch thick flame retardant mill board covered with not less than No. 28 MSG sheet steel, 0.015 inch thick stainless steel, 0.024 inch thick aluminum or 0.020 inch thick copper.
E - 4 inches minimum from back splash of countertop to edge of grill (refer to the page 8 for overall grill dimensions). 1-1/2 inches minimum from front of counter to grill.

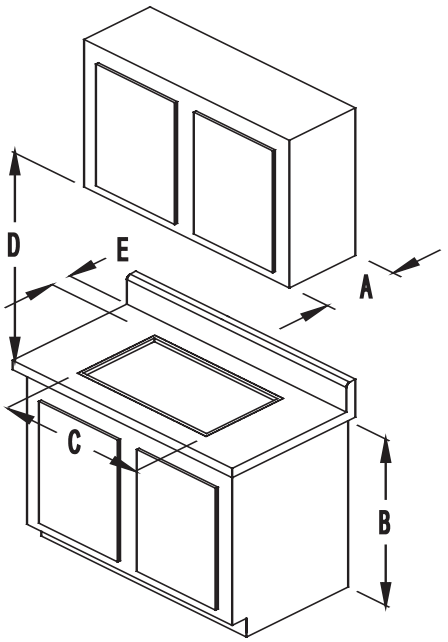

Fig. 6

FOR INSTALLATIONS IN CANADA: "Do Not Install Closer Than 1/2 Inch (12 mm) From Any Adjacent Surface", and **NE PAS INSTALLER A'MDINS DE 12MM DETOUTE SURFACE ADJACENTE.**

WARNING:

To eliminate the risk of burns from reaching over heated grill, cabinet storage space located above the grill should be avoided. If cabinet storage is to be provided, the risk can be reduced by installing a range hood that projects horizontally a minimum of 5 inches beyond the bottom of the cabinets.

Before making the countertop cutout, check for clearance. Check to see that the grill will clear the front and side walls of the base cabinet. Also check for proper clearance to the back splash so that the lid can open fully.

Adequate ventilation of the space below the countertop must be provided to ensure proper operation of the grill. Heat transferred from the grill bottom pan during operation will overheat an improperly ventilated area.

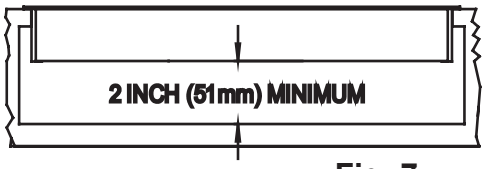

Fig. 7

When making countertop cutout, radius the corner to help prevent cracking of the countertop material. A 1/4 inch radius is typical, but follow the countertop manufacturer's instructions regarding the minimum radius and any reinforcements required to prevent damage to the countertop over time.

If your countertop is made of solid surface material you will need to check with the manufacturer for specific recommendations for cooktop & grill installation instructions. Most solid surface countertop manufacturers require additional corner supports to prevent damage to the countertop. Use the included screws to secure the grill to the countertop. Be careful not to over-tighten the screws. Use an acrylic caulk to seal the flange to the countertop.

If your countertop is made of stone you will need to use an acrylic latex to mount the grill in place. Put a large bead of caulk around the cutout opening and place the grill in place. Wipe away any excess caulk, use water to remove the excess caulk. Allow the caulk to dry for a minimum of 24 hours without any moisture being allowed to come in contact with the caulk. Do not use the screws that came with your grill. The caulk will hold the grill securely. Do not use a caulk which contains silicone as this will stain the stone.

Drain Connection

For your convenience, the grill is equipped with a 1/8” NPT brass pipe fitting and 90º brass elbow which you can attach the 1/4” ID flexible hose that came with your grill. The portable version of the grill comes with a brass pipe plug installed in the drain fitting. If you are using your grill as a portable unit, save the hose and 90º brass fitting for possible installation in the future.

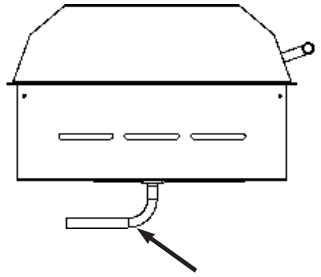

Fig. 8

Outlet Location

Be sure the electrical outlet intended for the grill is in an easily accessible location. This allows the user to easily plug and unplug the grill. This is necessary to ensure safe cleaning and storage of the grill.

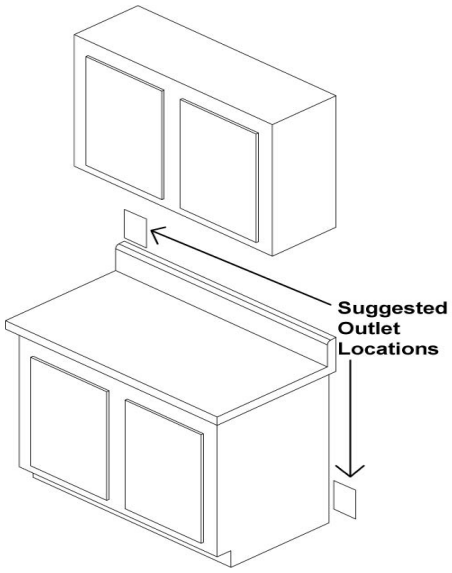

Final Preparations Prior to Use

Remove the protective plastic film from the lid, trim flange and glass panel. Clean the grill before you use it for the first time. A thorough cleaning with a stainless steel or glass cleaner will remove any traces of plastic film adhesives and manufacturing oils.

Wash the nonstick coated grates in warm soapy water before using the grill.

OPERATION OF GRILL

DO NOT USE WATER ON GREASE FIRES
Smother fire or flame or use dry chemical or foam-type extinguisher.

USE ONLY DRY POT HOLDERS
Moist or damp pot holders on hot surfaces may result in burns from steam. Do not let pot holder touch the grate or element of the grill. Do not use a towel or other bulky cloth in place of a pot holder.

DO NOT COOK ON BROKEN GRILL GRATE OR GRIDDLE
If the grate should break, grease and oils may come into direct contact with the electric element and create a risk of electric shock or fire. Contact an authorized service center or KENYON Customer Care immediately at (860) 664-4906.

CLEAN GRILL WITH CAUTION
If a wet sponge or cloth is used to wipe spills on a hot cooking surface, be careful to avoid steam burns. Some cleaners produce noxious fumes if applied to a hot surface. Read the cleaner label for details prior to using.

DO NOT TOUCH HEATING ELEMENT OR GRATE
The heating element and grate will be hot for some time after cooking. These components should be allowed to cool and then be handled with care and caution while cleaning, as they may be hot enough to cause severe burns.

CLEAN GRILL AFTER EACH USE
This appliance is equipped with a removable, disposable drip pan. This pan **MUST** be removed and cleaned after each and EVERY use. Do not allow grease to accumulate between cooking. The grease pan and baffle tray **MUST** be used when cooking on the grill. Excessive grease may spill over into the interior of the grill, voiding your warranty and posing a fire hazard.

NEVER LEAVE GRILL UNATTENDED AT HIGH HEAT SETTINGS
High heat setting may cause heavy smoking and ignite grease.

DO NOT CLEAN UNIT WITH PRESSURIZED WATER
Never clean the grill with any form of pressurized water or other types of cleaners. Doing so will void the warranty and may pose a serious risk of electric shock. Always clean the grill with a cloth and a stainless steel or glass surface cleaner.

STORAGE
When used as a portable grill, store indoors when not in use. When used as a built-in grill, suitable shelter must be provided to prevent direct exposure to rain. Covers available.

TO PREVENT SMOKE
To prevent the contents of the grease pan from smoking, place 1 cup of water (or enough to cover the bottom of the pan) in the grease pan before cooking.

DO NOT USE POTS OR OTHER BAKEWARE ON THE GRILL

KEEP THESE INSTRUCTIONS WITH THE GRILL FOR FUTURE REFERENCE

Power Control

POWER ON
To turn on the power you must *push the knob down* and rotate either clockwise (highest) or counter-clockwise (lowest) to activate the heat setting.

POWER ON INDICATOR
The red LED display, when illuminated, indicates the grill is ON.

POWER LEVEL
There are infinite power levels for the grill. The lowest setting is counter-clockwise of center with the highest being to the clockwise of center. Each has a detent to indicate lowest and highest setting.

POWER LEVEL GRAPHIC
Depicts the level of heat output of the element. The line sweeps from thin to thick, indicating low to high power. The line is broken into eight segments.

TEMPERATURE SETTING
These are average temperatures, you may experience different temperatures depending on ambient temperature and whether lid is open or closed.

1. Lowest - 140ºF
2. 185ºF
3. 245ºF
4. 300ºF
5. 355ºF
6. 445ºF
7. 570ºF
8. Highest - 625ºF

IMPORTANT!

Do not remove the control knobs for cleaning. Use a soft cloth to clean under the skirt of the knob.

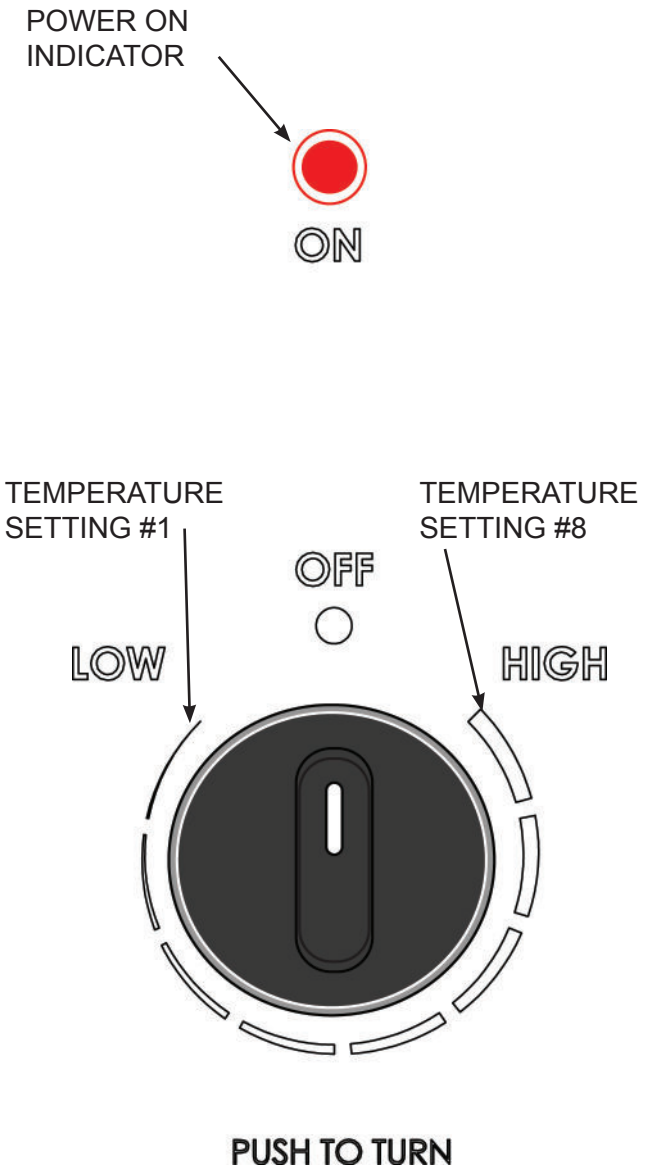

Fig. 9

Power Cord

THIS PERTAINS TO 120V MODELS ONLY

GROUND FAULT CIRCUIT INTERRUPTER (GFCI)
The GFCI is a safety device designed to protect the user from any electrical shock hazard.

INDICATOR LIGHT
The indicator light will stay illuminated when electrical power is applied and indicates that the GFCI is working properly.

TEST/EMERGENCY OFF BUTTON
Pressing this button will test the GFCI. The indicator light will go out and electrical power will not be supplied to the grill. The GFCI should be tested monthly.

RESET BUTTON
Pressing this button will reset the GFCI to its normal function. The indicator lamp will illuminate and electrical power will be supplied to the grill. If the indicator lamp does not illuminate, the GFCI has detected a malfunction. Unplug the GFCI from the receptacle and do not use the grill.

GROUNDED 3-PRONG PLUG
CAUTION - To ensure continued protection against risk of electric shock, the GFCI must be plugged into a properly grounded receptacle.

DO NOT USE AN EXTENSION CORD

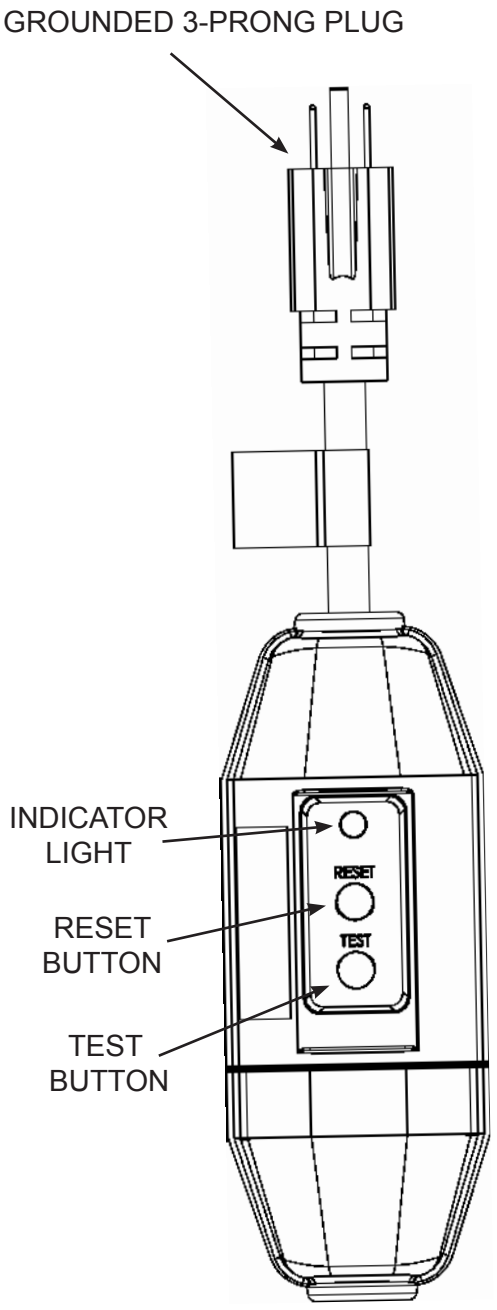

GROUND FAULT CIRCUIT INTERRUPTER GFCI

Fig. 10

Grill Parts

HEATING ELEMENT
The heating element is designed to pivot as shown to remove/replace the baffle tray and drip tray. It will stay in the up position. To put down apply slight downward pressure.

BAFFLE TRAY
The baffle tray supports the drip tray, heating element and grate and must always be used when operating the grill.

DRIP TRAY
The disposable drip tray collects all the fat and juices created during the cooking process. The drip tray must be emptied after each use. When replacing the drip tray, position the drip tray so that it is completely contained inside the baffle tray and insuring that the side or the rim of the drip tray does not protrude outside of the baffle tray.
(see Fig. 11)
To prevent the contents of the drip tray from smoking, place 1 cup of water (or enough to cover the bottom of the pan) in the drip tray before cooking. The replacement for the disposable drip tray is Kenyon part #B96001.

GRATE
The grate must be cleaned after every use. The grate has a nonstick coating for ease of cleaning. Wash the grate after each use in warm soapy water.

Fig. 11

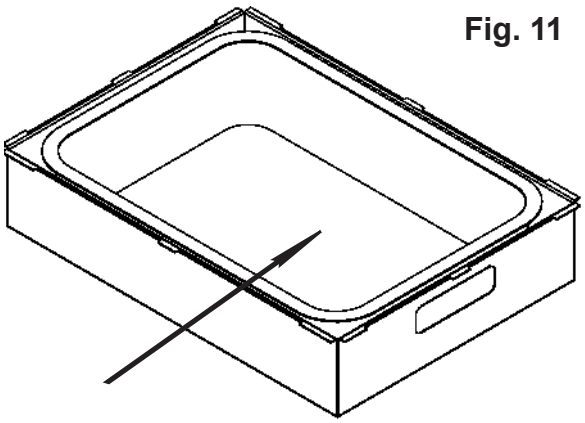

DRIP TRAY MUST BE CONTAINED
INSIDE OF BAFFLE TRAY AS SHOWN

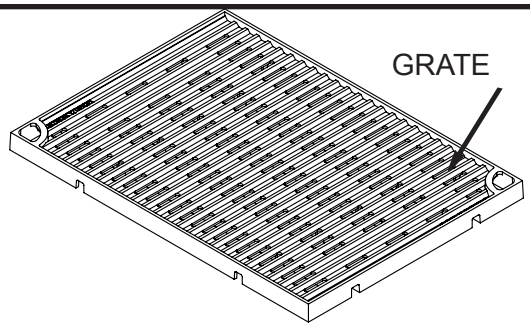

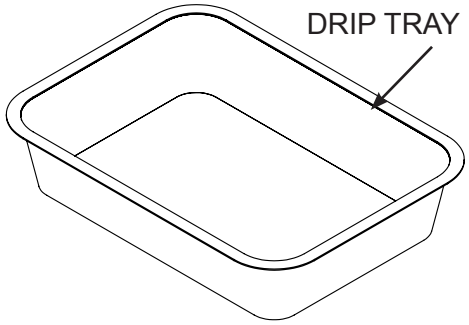

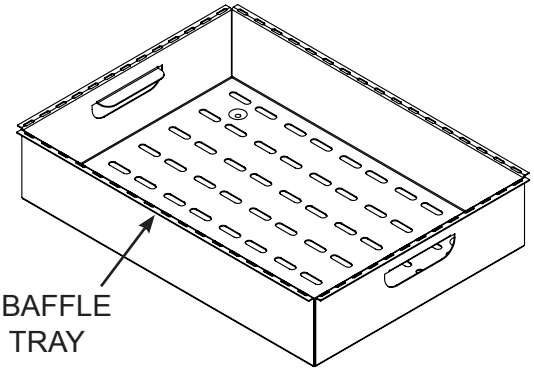

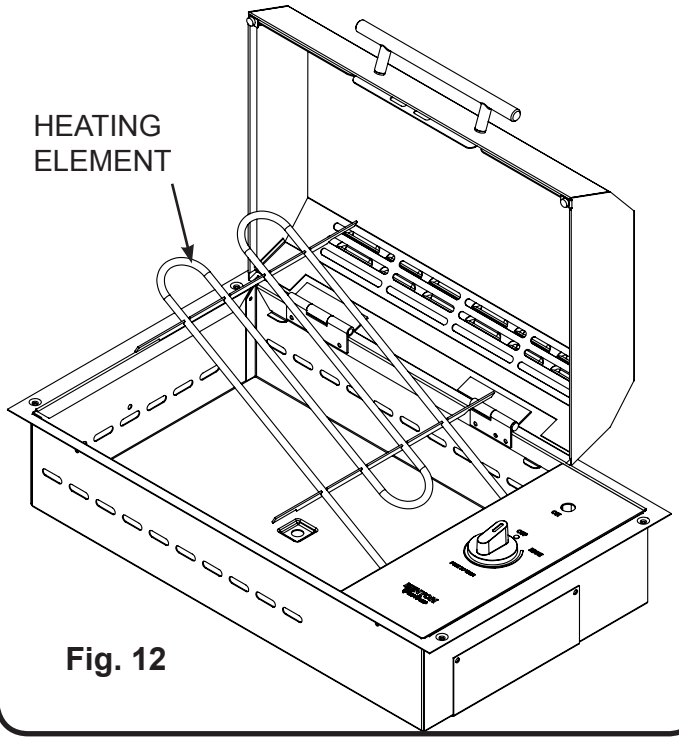

Fig. 12

Lid Removal

LID REMOVAL
The grill lid is removable for cleaning. To remove the lid, slide the quick release pin out of the hinge. (see Fig. 13)

With the quick release pin removed, grasp the lid, lifting on the left side to clear the hinge and slide it the left until clear of the hinge pin on the right. (see Fig. 14) Once the lid is removed, it can be washed in warm, soapy water.

Fig. 13

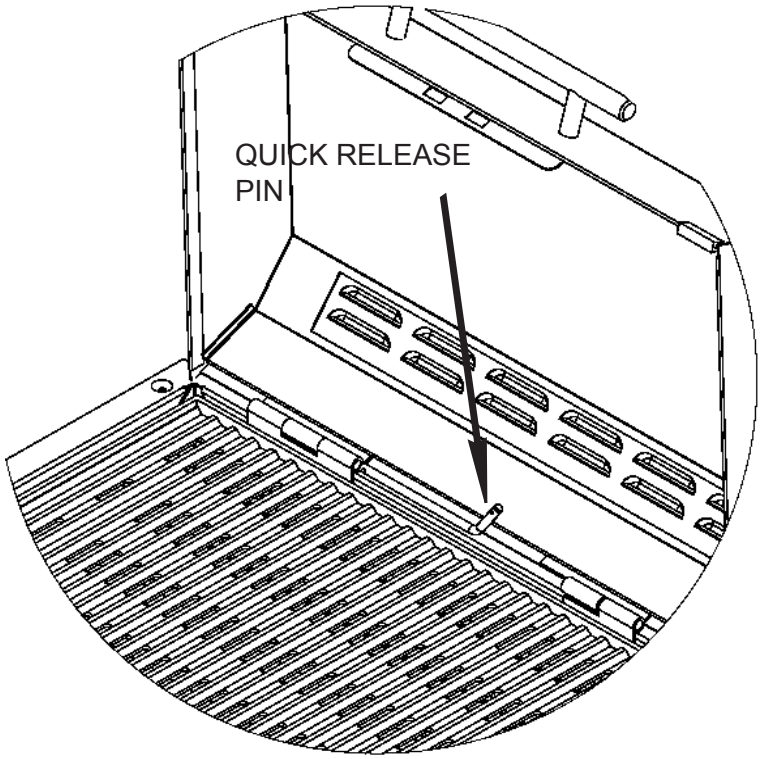

Fig. 14

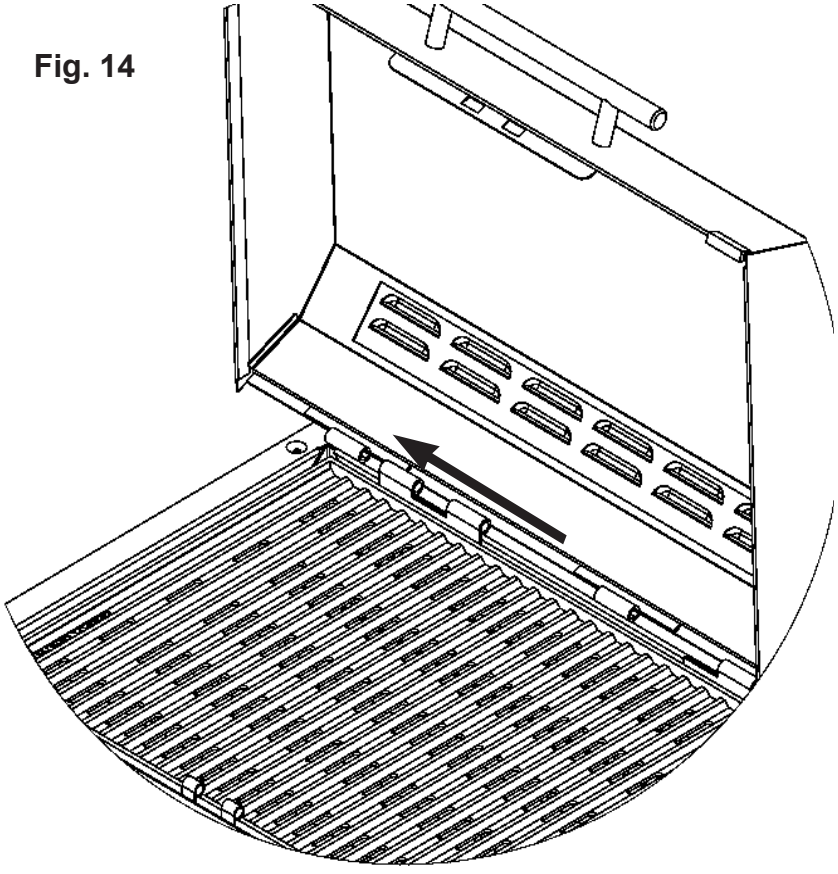

WARRANTY

Kenyon International, Inc (the “Company”) warrants its products in normal usage to be free of defects in materials and workmanship subject to the conditions and limitations below.
Any part, which proves to be defective in normal usage during the warranty period will be repaired or replaced by the Company.

This warranty covers certain products built by the Company and is subject to the following conditions and limitations:

1. The Company’s liability shall be limited to repair or replacement (choice of remedy at Company’s option) of electronic components and grill grate/griddle as may be defective in materials or workmanship. This liability is limited to three years from the date of original installation or 42 months from invoice date, whichever comes first; this warranty covers parts and labor at approved Company rates, $75 per hour. Stainless steel is warranted with a lifetime guarantee to be rust free, though proper maintenance of grill is expected. Please refer to the care instructions in owner’s manual. If corrosion begins, contact the Company with photo evidence of corrosion for replacement components.

2. Determination of suitability of the product for use contemplated by the Buyer, is the sole responsibility of the Buyer and the Company shall have no responsibility in connection with such suitability.

3. The Company shall not be liable for any damage resulting from:
   - failures due to use of the product in applications for which they are not intended;
   - failures due to wear and tear, abuse, carelessness, improper installation or maintenance;
   - failures due to breakage of glass, accidental or not.

4. The Company shall be responsible for ground shipping charges to the location of the appliance (home) within the continental United States and Canada. Any duties, express or special shipping charges are at the expense of the Buyer.

5. All labor allowed by the Company under this warranty must be performed by an Authorized Kenyon International Service Center, unless otherwise specified in writing by the Company.

THERE ARE NO OTHER WARRANTIES OF MERCHANTABILITY, FITNESS FOR PURPOSE OR ANY OTHER KIND, EXPRESSED OR IMPLIED AND NONE SHALL BE IMPLIED BY LAW. The duration of any such warranties that are nevertheless implied by law for the benefit of a consumer, shall be limited to a period of three years from original purchase by the user. Some countries do not allow limitations on how long an implied warranty lasts, so this limitation may not apply to you.

THE COMPANY SHALL NOT BE LIABLE FOR CONSEQUENTIAL OR INCIDENTAL DAMAGES ARISING FROM THE BREACH OF THIS WARRANTY, WHETHER EXPRESSD, IMPLIED OR STATUTORY. Some countries or states do not allow exclusion or limitation of consequential or incidental damages so this limitation or exclusion may not apply to you.

THIS WARRANTY GIVES YOU SPECIFIC LEGAL RIGHTS AND YOU MAY ALSO HAVE OTHER LEGAL RIGHTS THAT MAY VARY FROM COUNTRY TO COUNTRY AND STATE TO STATE.

Kenyon International, Inc.
P.O. Box 925 • 8 Heritage Park Road • Clinton, CT 06413 USA
Phone (860) 664-4906 • Fax (860) 664-4907
www.cookwithkenyon.com